ø 195 x 70 mm

ETRI®
DC Backward Curved Fans

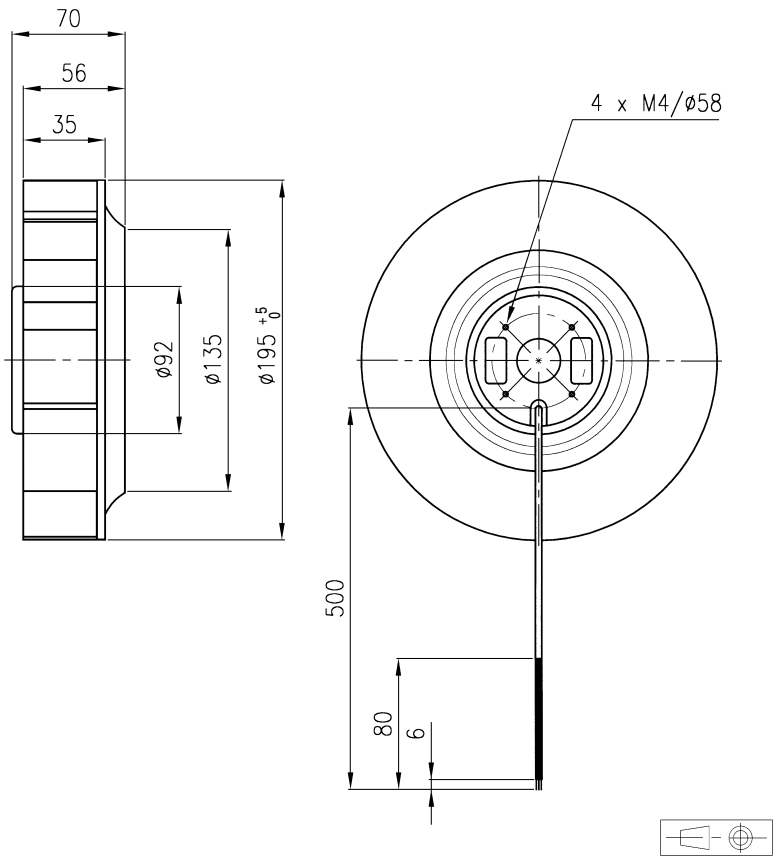

Approvals

CE UL

Life expectancy

L-10 LIFE AT 40°C:
80 000 hours

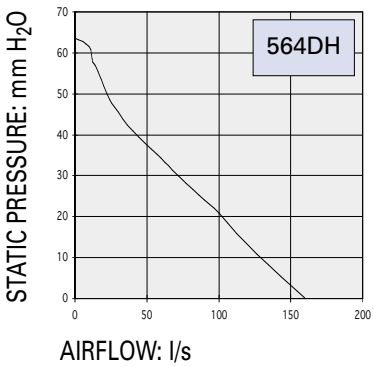

Brushless DC Motor
Wheel material: plastic UL 94 VO
Weight: 1,45 kg
Design code: C13 - Tropicalized
IP 44

Speed sensor
Variable speed (0 - 10 V input / PWM)

Available with:
- steel wheel (consult factory)

Part number	Nominal voltage	Airflow	Noise level	Nominal speed	Input power	Voltage range	Bearing system		Connection type		Operating temperature	
	V	l/s	dB(A)	RPM	W	V	Ball	Sleeve	Leads	Terminals	Min. °C	Max. °C
564DH4LM19000	48	160,0	67	3400	83,0	(36-60)	X		X		- 20	70

Additional versions:
Salt spray protection - high temperature range - IP 54 - alarm as options
Other voltages: consult factory

Accessories:
Consult factory

Non contractual document. Specifications are subject to change without prior notice. Pictures for information only. Edition N°2/0-Rev. 1